Ji'nan ShengTai Painting Equipment Co.,Ltd.
Address: East of the intersection of Dongwaihuan Road and Wenhua Road in Wenden Village, Diaozhen Street, Zhangqiu District, Jinan City,Shandong Province
Email: ceces2018917@gmail.com WhatsApp:+8615854139190

Automatic Powder Coating Reciprocator and Spray Gun

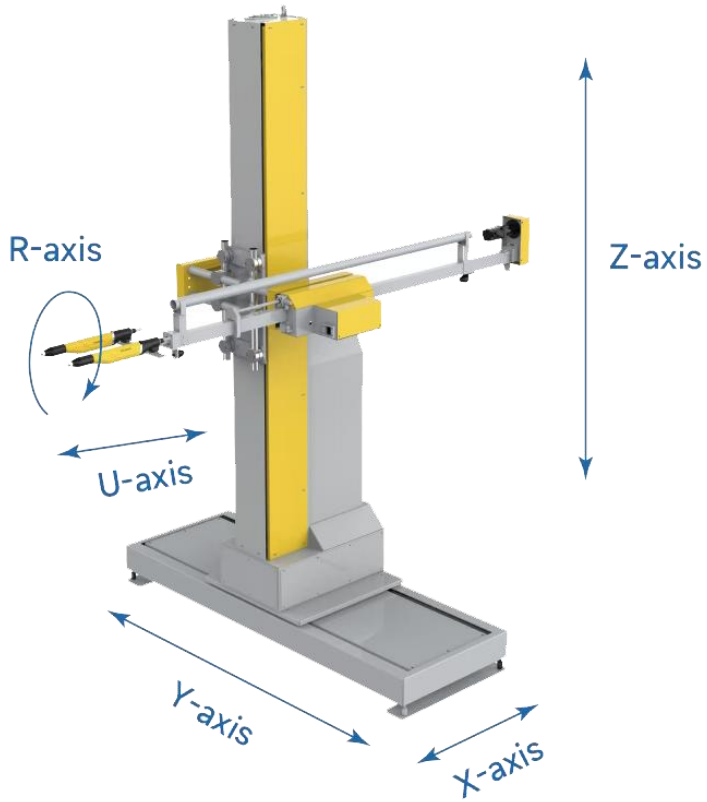

Model: ST–PCL–R200C

Power: 220V, single phase, 1.2kw

Motor: Servo motor, 1.2kW servo drive

Control: Touch screen control

Travel: 2 meters or customized

Lowest position: 0.7meter

Total height: 3.2meter

Effective processing width (mm): 600

Effective processing length (mm): 600

Oil supply method: Diaphragm pump

Controller (PLC): Japan Omron

Touchscreen: Taiwan Weintek

Servo motor: Taiwan Delta

Frequency converter: Taiwan Delta

Divider: Taiwan–made

Air pressure (MPa): 0.4—0.6

Spray gun brand: Japan Anest Iwata

Spray gun nozzle diameter (mm): 1.0

Number of spray guns: 1—2

Paint types: PU, PE, UV, water-based paint, etc.

External dimensions (mm): 2200×1900×1500

Total power (kW): 5.0

Machine weight (kg): 500

Origin: China

The Advantages of Five-axis reciprocating machine:

1. Capable of storing up to 120 sets of product formula parameters, ensuring greater convenience in operation.
2. Wide applicability, strong adaptability, high productivity, stable quality, and efficient spraying.
3. The system can be configured with 1—2 spray guns, each adjustable for opening and closing times to save coating materials.
4. Servo motor drive enables high speed and precise positioning; Chinese HMI + PLC control supports diverse and multi-specification production processes.
5. Independently developed fully enclosed modular sliding table.
6. Turntable adopts a dual-material tray exchange structure.
7. Pioneering area-based control system.
8. Multiple spray gun on/off modes available, featuring contour tracking and dust-blowing functions.
9. Multiple spraying modes support continuous operation.
10. Equipped with single-side restoration and testing functions.
11. PLC touchscreen control system for simple and intuitive operation.
12. Servo motor precisely controls spray gun trajectory, ensuring even paint film thickness with system accuracy up to 1 mm.