Ji'nan ShengTai Painting Equipment Co.,Ltd.
Address:East of the intersection of Dongwaihuan Road and Wenhua Road in Wenden Village,
Diaozhen Street, Zhangqiu District, Jinan City,Shandong Province
Email: ceces2018917@gmail.com WhatsApp:+8615854139190

No		Equipment	Specification	Unit	Quantity	Remark
I Shot Blasting Machine Assembly						
1	Shot Blasting Machine		Q034 Direct-Coupled (120Kg/min)	Set	6	Inverter Speed Control
	Main configuration per set as follows					
	1	Motor	7.5kW, Direct-Coupled Motor, ₵250mm Impeller, 2900 rpm	Unit	1	Per assembly
	2	Housing	Welded Steel Plate	Set	1	Per assembly
	3	Wear Parts	Service life: Blades 300h; Distributor and Control Cage 4000h; Side, Top, and End Guard Liners 5000h.	Set	1	High-durability alloy
II Blast Cabinet Opening: 400mm (H) * 2000mm (W)						
1	1	Main Chamber	Constructed from welded steel plates. The wear-resistant liners are made of Mn13 (Manganese 13) steel, precision laser-cut for accuracy. All joints are	Set	1	L=1.5m

		fully seam-welded using stainless steel electrodes after assembly. The liners are secured to the shell via through-bolt connections with wear-resistant pressure nuts.			
2	Front Seal Chambers	Made of welded steel plates, equipped with sealing curtains, and the first compartment is lined with alloy and manganese steel plates.	Set	1	L=3m
3	Rear Seal Chamber	Made of welded steel plates, equipped with sealing curtains, and the first compartment is lined with alloy and manganese steel plates.	Set	1	L=3m
4	Recovery Hopper		Set	1	L=3m

III Roller Conveyor						
1	1	Inlet Roller Conveyor	Length: 4m; Roller frame: 12# channel steel; Rollers: ₵ 73*5mm; Roller pitch: 0.8m; Load capacity: ⩾0.3T/m; 12A chain drive; 3kW motor	Set	1	Including anti-collision facilities
	2	Outlet Roller Conveyor	Length: 4m; Roller frame: 12# channel steel; Rollers: ₵ 73*5mm; Roller pitch: 0.8m; Load capacity: ⩾0.3T/m; 12A chain drive; 3kW motor.	Set	1	
	3	Internal Roller Conveyor	7.5m; 12A chain drive	Set	1	including wear-resistant rollers for the main chamber, with a service life of 5,000 hours.

IV Cleaning Device						
1	Reverse Pulse-jet System		SFC-219	Set	1	
	Main configuration per set as follows					
	1	Reverse Pulse Pipe	℄ 219mm Round Pipe, ℄ 32 Duckbill Nozzle	Set	2	
	2	Sealing Device	Bristle Brush, Wear-resistant Rubber Sheet	Set	2	
	3	Reverse Pulse Fan	9-26-18.5kw	Set	1	
V Abrasive Recovery System						
1	Longitudinal Screw Conveyor		XJL-250	Set	1	Anti-clogging Alarm
	Main configuration per set as follows					
	1	Geared Motor	BWD3-23-4KW	Unit	1	
	2	Screw Conveyor	Blade δ5 ; UCP210 Bearing	Piece	1	
	3	Detection		Set	1	

		Device				
2	Transverse Screw Conveyor		XJL-250	Set	1	Anti-clogging Alarm
	Main configuration per set as follows					
	1	Geared Motor	BWD3-23-4KW	Unit	1	
	2	Screw Conveyor	Blade δ5 ; UCP210 Bearing	Piece	1	
	3	Detection Device		Set	1	
3	Bucket Elevator		XTS-45T	Set	1	Anti-clogging and belt-slip detection alarm system; high-strength elevator belt.

	Main configuration per set as follows					
	1	Geared Motor	BWD3-17-5.5KW	Unit	1	
	2	Elevator Belt	EP with thickness 10mm	Piece	1	
	3	Elevator Housing	270*700mm	Set	1	
	4	Elevator Roller	Diameter 280mm	Set	1	
	5	Detection Device		Set	1	
4	Abrasive Separator		XFL-45T, Secondary Air-Wash	Set	1	Anti-clogging Alarm
	Main configuration per set as follows					
	1	Separator Chamber	Secondary Air-Wash	Unit	1	

	2	Abrasive Storage Hopper		Set	1	
	3	Geared Motor	BWD3-23-4KW	Unit	1	
5	Platform, Guardrails, and Ladder			Set	1	
6	Abrasive Feed System		₡89	Set	6	
	Main configuration per set as follows					
	1	Cylinder	SC40*200CB	Piece	1	
	2	Abrasive Feed Valve		Set	1	
VI Dust Collection System						
1	Centrifugal Fan		4-68-4.5A 15kW Air Volume：15000m^3/h	Set	1	
2	Cartridge Dust Collector		LT3-15;	Set	1	meeting international

			High-efficiency Two-stage dust extraction (Settling chamber + Cartridge filters). Air Quality: Guaranteed indoor emission concentration < 20mg/m³			clean-room workshop standards.
	Main configuration per set as follows					
	1	Dust Collector Housing	L2300*W1300*H3200mm	Unit	1	
	2	Filter Cartridges	Size: Ø325-1100mm; Surface Area: High-capacity 18m² per cartridge	Piece	15	PTFE Coated
	3	Pulse Jet System	5-Channel Pulse Timer	Unit	1	
	4	Pulse Valve	Valves: 1.5" Right-angle Pulse Solenoid Valves	Piece	5	

3	Settling Chamber		δ3 steel plate	Unit	2	First-stage filtration
4	Dust Extraction Ducting		Complete Dust Extraction Ducting with optimized Air Inlets. Integrated Silencer for noise reduction.	Set	1	Galvanized Corrugated Chimney Pipe
VII Electrical Control System						
1	1	Electrical Control System	Mitsubishi PLC and Frequency Inverters; All low-voltage electrical components (contactors, breakers, etc.) utilize the CHINT brand.	Set	1	
	2	Operating Control System		Set	1	
	3	Accessories and Fittings	Wires and Cables、Cable Trays Accessories and Fittings	Set	1	
VIII Recovery Cabinet						
1	Recycling & Separation Unit		6400*800*2000	Set	1	1.2mm Galvanized

					Steel Sheet
2	Chamber	6400*1800*2900	Set	1	1.2mm Galvanized Steel Sheet
3	Solenoid Pulse Controller		Set	12	
4	Pulse Controller		Set	1	
5	Filtration	325*900	Set	12	Customized
6	Air Header		Set	1	
7	Slide Rails	QXG-200	Set	3	1.8m/Set; Sliding Frame: 3 Sets; Single-point load: 30kg
8	Exhaust Fan	4-72-4A -5.5kW	Set	3	

9	Controller			Set	1	
IX Painting Equipment						
1	Spray Gun		Made in China	Set	3	

Here are the pictures of the equipment for your reference:

Shot Blasting Machine

A shot blasting machine (also known as a sandblasting or grit blasting machine) is a type of foundry equipment that utilizes a high–speed blast wheel to propel abrasives to clean or strengthen the surface of castings. Its abrasive finishing methods include centrifugal grinding, water vortex grinding, and rotary grinding, among others. It was first applied in the foundry industry to remove bonded sand and oxide scales from the surfaces of steel and iron castings.

Shot blasting is a processing technology that uses a blast wheel to hurl steel grit or steel shot at high speeds, impacting the surface of a material or object. Compared to other surface treatment technologies, it is faster, more efficient, and can be

integrated into parts of the casting process after retention or stamping.

Shot blasting machines are also used to remove burrs, diaphragms (flashing), and rust, which may otherwise compromise the integrity, appearance, or precision of a part. Furthermore, they can remove surface contaminants from a partially coated surface and provide a specific surface profile that increases coating adhesion, thereby achieving the goal of strengthening the workpiece.

A shot blasting machine differs from a shot peening machine; the latter is specifically used to enhance the fatigue life of parts by increasing residual surface compressive stress, thereby improving component strength or preventing fretting.

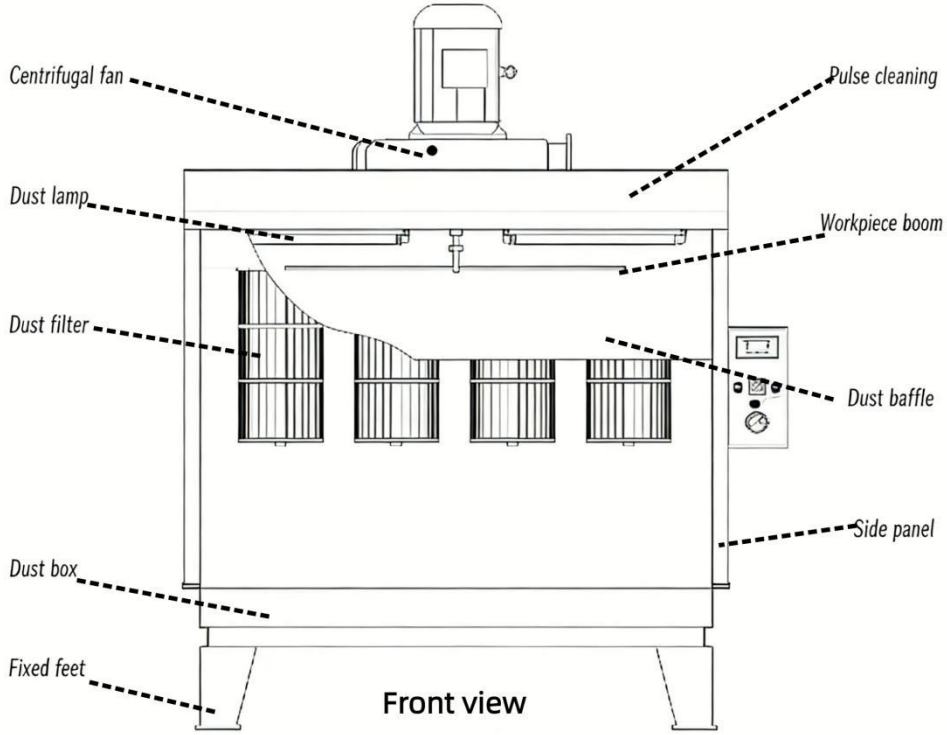

Powder Coating booth Instruction Manual

1. Equipment Overview

The Powder Coating booth is a special equipment for powder recovery in coating production lines. It is widely used in powder recovery, welding fume and dust purification and other multi-functional treatment scenarios in industries such as automotive shell spraying, polishing, cutting and welding, and powder stirring.

① Adopts high-efficiency polyester fiber filter material with good air permeability and dust collection efficiency of ⩾98%;

② The inner wall of the cabinet is smooth and clean to prevent powder from splashing and overflow, protecting the operator and improving powder collection efficiency;

③ High-precision polycarbonate shell, large air volume and low power consumption, not easy to age, and quick color replacement;

④ The automatic PLC pulse back-blowing dust cleaning device significantly improves the powder recovery effect;

⑤ Simple and easy-to-operate panel facilitates maintenance and management, ensuring operator health and improving production efficiency.

2. Installation and Operation

2.1 Before Operation

① Conditions: The equipment shall not be used in high temperature, high humidity, corrosive, vibration, strong magnetic field or flammable and explosive environment;

② Installation: The equipment installation site shall be level and flat, with fixed positioning; avoid moving the equipment during operation or shifting to cause safety accidents;

③ Power supply: Connect the 380V/50HZ power supply of the unit to the power distribution cabinet (if it is 220V, please mark it separately); all parts must be effectively grounded to avoid burning the motor or other components due to phase loss;

④ Dust cleaning: If the unit is equipped with a pulse dust cleaning device, connect the compressed air (pressure requirement: 5–8kg/cm²) to the interface, and check whether the pressure gauge indication is consistent with the standard;

⑤ Inspection: Ensure that the unit has no sliding; check that the fan, filter, door frame and other parts are loose or air leakage, otherwise, fix them firmly. Sealing Treatment; Close all maintenance hatches and dust collection drawers tightly; if air ducts are connected externally, ensure all air regulating valves have been opened.

3. Equipment Operation

① Debugging: Power on the unit, and confirm that the rotation direction of the fan impeller is consistent with the arrow mark (the suction may be abnormally reduced if reversed);

② Operation: The fan and its matched pulse device, unloader (if equipped), shall be started, operated and shut down synchronously; adjust the air regulating valves of the air duct to the required suction or air volume;

③ Dust Cleaning: Check the dust accumulation in the dust collection box at any time (must not exceed 2/3 of the box volume). Before cleaning, shut down the unit first and clean out all dust residues in the dust collection box;

④ Pulse System (if configured): The pulse ash removal device shall be kept in normal operation; the PLC pulse settings have been debugged before leaving the factory. However, the ash removal cycle can be adjusted by setting according to changes in dust concentration and dust removal effect (see "PLC Pulse Instrument Instructions" for details) to maintain the best air circulation.

The functions and settings are for reference only (the panel and function settings may vary by brand):

Setting Function	Operation Steps & Display Rules

Setting Function	Operation Steps & Display Rules	
Operation Process	1. Power–on Display → [Switch] → [Function] → Select A/B/C/F for cycle setting2. Press [Increase] or [Decrease] to input the target value → Press [Switch] to automatically save and start operation	
Display Rule	The first 2 digits: Valve action status; The last 2 digits: Countdown interval time	
Parameter Setting	**Parameter Description**	**Suggested Setting Range**
A	Pulse valve action time (milliseconds, ms)	10–100 (0.01–0.1 seconds)
B	Interval time between pulse valve actions (seconds, s)	20–60 seconds
C	Pulse valve cycle interval time (seconds, s)	0 or less than B value
F	Number of output channels for controlling pulse valves (units)	Input the actual number of pulse valves to be controlled

4. Maintenance Management

Electrical Control Diagram (For reference only)(Attached with electrical control schematic diagram of the system, including circuit connections of pulse control instrument, contactors, fan motor, etc.) IV. Maintenance Management

Equipment Component	Inspection Notes	Inspection Cycle
Centrifugal Fan	① No vibration, abnormal noise or motor heating during operation;② Fan casing free of deformation; fan impeller free of scaling, deformation, etc.;③ Ensure no impurities or other foreign matter inside the fan casing, and no loose parts	At least once a week
Ash Removal or Unloader	① Clean up dust residues in the dust collection box (bag) in a timely manner;② All maintenance hatches and ash removal doors are tightly closed without air leakage;③ Equipped with unloader devices: no dust accumulation on brackets, etc.	At least once a week

Equipment Component	Inspection Notes	Inspection Cycle
Dust Removal Filter	① No special configuration required; filter used at normal temperature;② Filter sealing rubber ring free of shedding, damage or deformation; filter surface free of scaling;③ Do not strike the filter with sharp tools during cleaning to avoid shortening its service life	At least once a week
Pulse Ash Removal Device	① PLC pulse jet setting, see *PLC User Manual* for details;② Regularly remove dust accumulation on the surface; all wiring terminals shall be firmly connected without loosening;③ All pulse valves free of air leakage; pulse jet ash removal action is normal	At least once a week

5. Abnormalities and Troubleshooting

Fault Phenomenon	Possible Causes	Troubleshooting Methods
Reduced system suction and increased resistance	① Excessive or overly thick dust accumulation in the filter leading to clogging;② Excessively high ambient humidity causing surface adhesion and scaling of the filter;③ Malfunction of the ash removal device or incomplete ash removal;④ Insufficient compressed air pressure or air leakage of the pulse valve	① Shut down for cleaning or replace the filter; ② Perform thermal insulation or dehumidification/water mist removal for the equipment;③ Perform maintenance on the ash removal device or shorten the ash removal cycle;④ Check the pulse air circuit and air compressor
Obvious powder dust discharge at the outlet	① Damaged filter causing air leakage;② Excessively high dust concentration generated in the production process; ③ Too short ash removal cycle or overly frequent ash removal;④ Loose fixing of the filter and damaged sealing	① Shut down for tightening or replace the filter;② Perform comprehensive sealing or replace the filter;③ Adjust the pulse ash removal cycle;④ Tighten the upper filter or

Fault Phenomenon	Possible Causes	Troubleshooting Methods
	ring	replace it with a new one
Pulse valve or controller malfunction	① Power outage or damage to control components;② Clogging or air leakage of the pulse valve due to loosening;③ Damaged coil ring or diaphragm of the pulse valve	① Restore power supply or replace the pulse instrument;② Clean the dust inside the valve and tighten it;③ Repair and replace the diaphragm or the valve with a new one
Premature damage of the filter	① Improper use of filter material or air flow scouring;② Corrosion of the filter and wear and damage of the inner lining;③ Excessively high ash removal frequency or excessive air impact force	① Replace suitable filter material or add flow deflectors;② Replace the filter with a new one;③ Adjust the ash removal cycle and air pressure

6. After–sales Service

1. After–sales Management

① Keep the equipment and electrical control cabinet clean; maintain sufficient operating space around and do not pile up sundries at will;

② Operators shall understand the basic purification principle, operating performance, master parameter adjustment and carry out maintenance and fault inspection;

③ Shut down the equipment before fault maintenance. Prohibit non–professional personnel from disassembling or assembling to avoid personal injury accidents;

④ Operate in accordance with the User Manual, do a good job in daily inspection and operation records, and strengthen equipment maintenance and management.

2. Warranty Service

① Under normal use, the equipment enjoys "one–year warranty and lifetime maintenance" from the date of delivery (excluding vulnerable parts);

② Within the warranty period, for non–human or quality faults, we will reply and put forward treatment opinions within 24 hours after receiving the notice;

③ The following situations are not covered by the warranty:

a. Faults or damage caused by unauthorized use of the equipment before signing and delivery;

b. Unauthorized disassembly, functional modification, etc., without the company's authorized confirmation during the warranty period;

c. Faults caused by human factors, abnormal use, natural disasters and other irresistible factors.